# 21" ADA VANITY BRACKET

## ADA VANITY BRACKET FEATURES

- Available in Made in the USA or Imported
- 12 Gauge Steel offers superior strength
- Available in Black, White, Primer, Stainless Steel and Aluminum (Import Only)
- Optional mounting holes on the side of Black Brackets to install your finishing panel if desired
- Accommodates 22" to 24" tops
- Spring clips & screws provided for easy on/off front skirt attachment
- No visible fasteners
- No tools required to remove & reinstall skirt
- Mounting holes provided for skirt if you do not wish to use spring clips
- 3x3 cut out for wall cleat & wire run clearance
- Load limit range of 860 lbs to 1560 lbs per pair

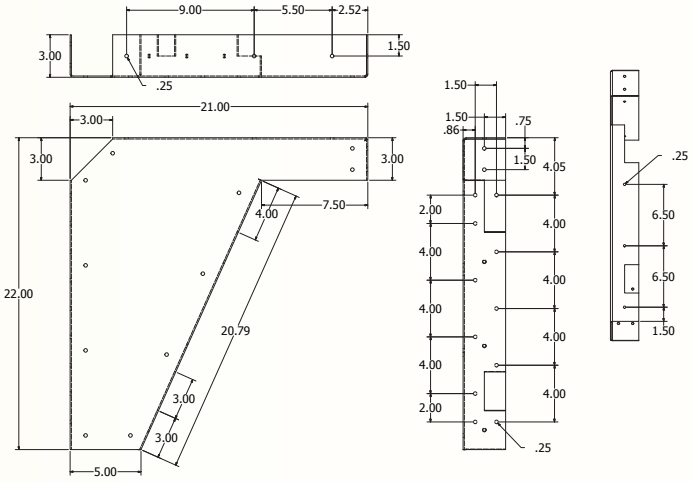

US Patent Number
US D796,302 S

| Bracket Options | 2-58 Per Bracket | 60+ Per Bracket | Pcs/Wgt/Box |
|---|---|---|---|
| US ADA Primer | $55.95 | $53.15 | 2pcs/25 lbs |
| US ADA (Black, White) | $75.95 | $71.15 | 2pcs/25 lbs |
| US ADA Stainless | $99.95 | $94.95 | 2pcs/25 lbs |
| Imported ADA | $36.95 | $35.10 | 2pcs/25 lbs |
| Imported ADA Stainless | $69.95 | $66.45 | 2pcs/25 lbs |
| Imported ADA Aluminum | $46.95 | $44.60 | 2pcs/25 lbs |

Formica Color Matches: Black 909-58 White 933-58 Primer


A&M HARDWARE, INC.

**Call To Order (888) 647-0200**

1165 Strickler Road, Mount Joy, PA 17552 | Fax: (717) 653-5874

**www.AandMhardware.com**